PR-LFXV-50

Unit: mm

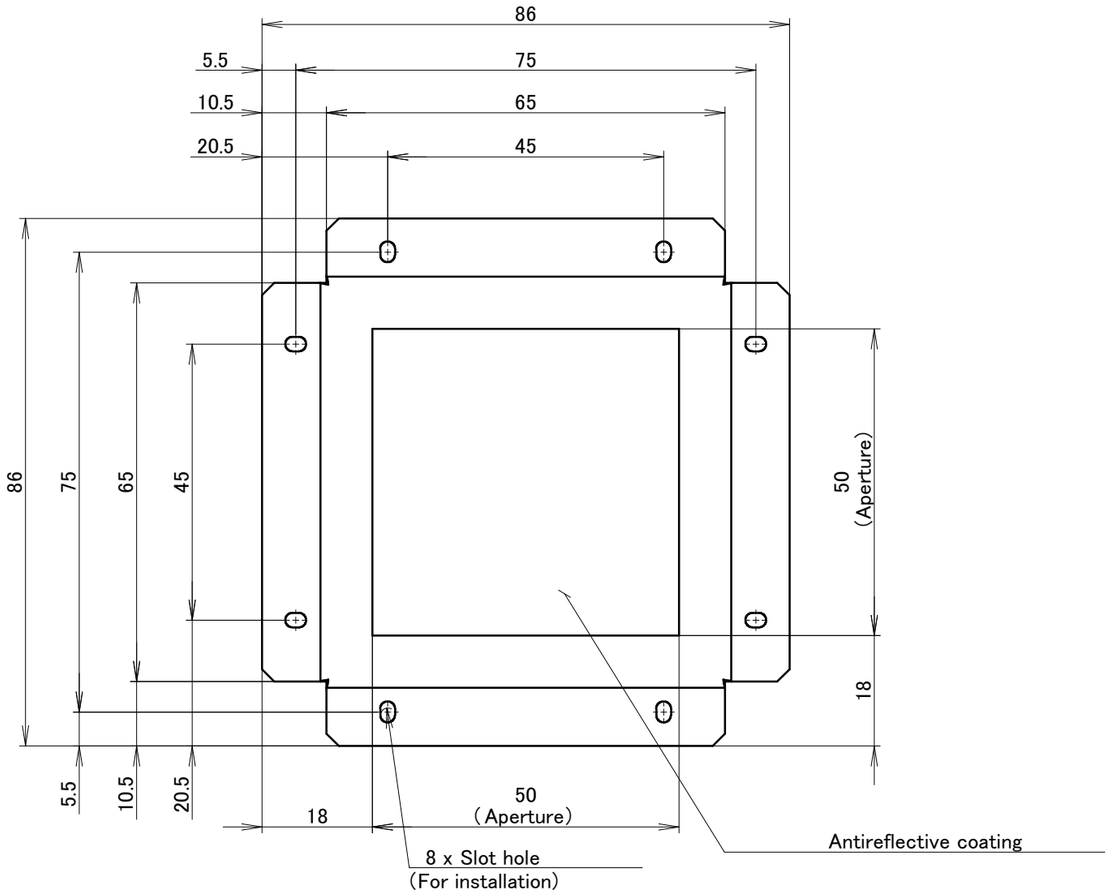

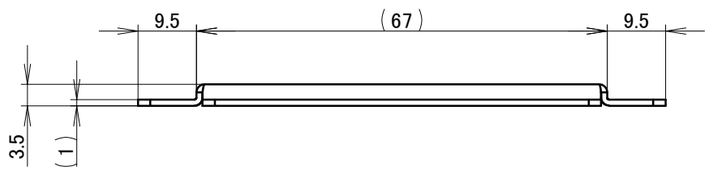

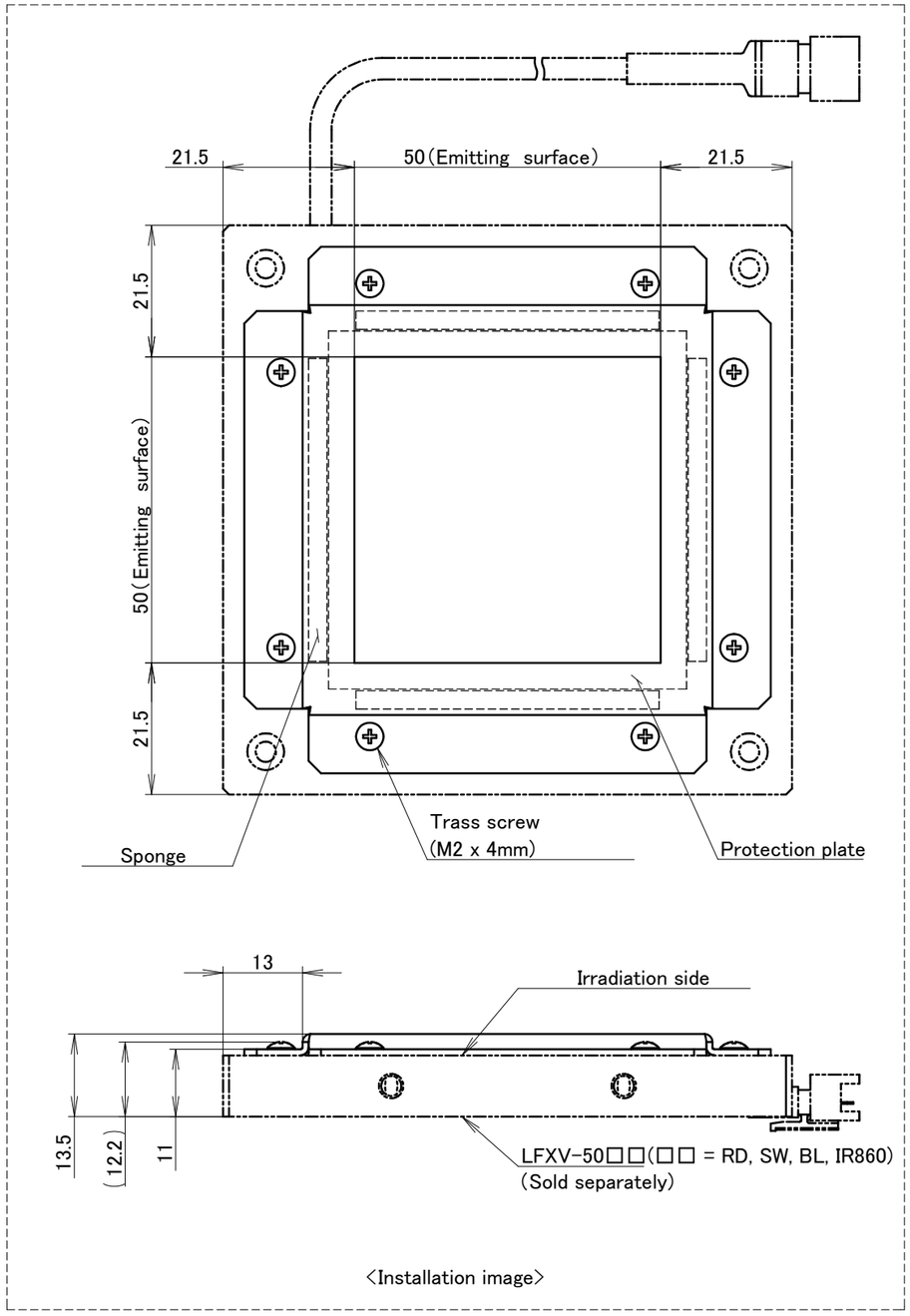

※ Accessories
・Trass screw(M2 x 4mm) 9Pieces.

Note: Insert the protective plate into the bracket before installing it on the illumination.

Mass: 25g(Approx.)

Copyright(C) 2020 CCS Inc. All rights reserved. Reproduction or photocopy without permission is prohibited.

CCS Inc.