Light Source Units

Continuous Lighting
Replacement for Metal Halide Light Source

PFBR-150 Series



PFBR-150SW

Click Here

PFBR-600SW2 Series*



PFBR-600SW2

Click Here

*Available in Asia-Pacific and Europe. *Coming soon in the United States.

Illuminance comparison

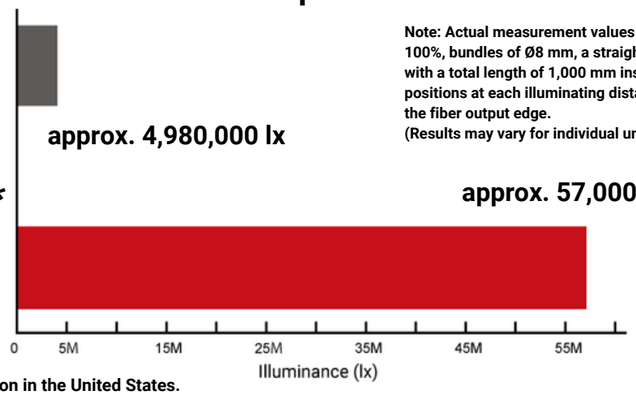

Note: Actual measurement values with intensity of 100%, bundles of Ø8 mm, a straight light guide with a total length of 1,000 mm installed, and at positions at each illuminating distance away from the fiber output edge.
(Results may vary for individual units.)

Strobe Lighting
Replacement for Xenon Flash Light Source



PFBR-600SW2 Series
Equivalent to xenon 20W*



PFBR-2400
Equivalent to xenon 40W*

*According to a survey by CCS

- Longer lifespan significantly reduces the running costs
- Flash on/off is possible with a high-speed response with in 1µs

Pulse output compared with a xenon light source

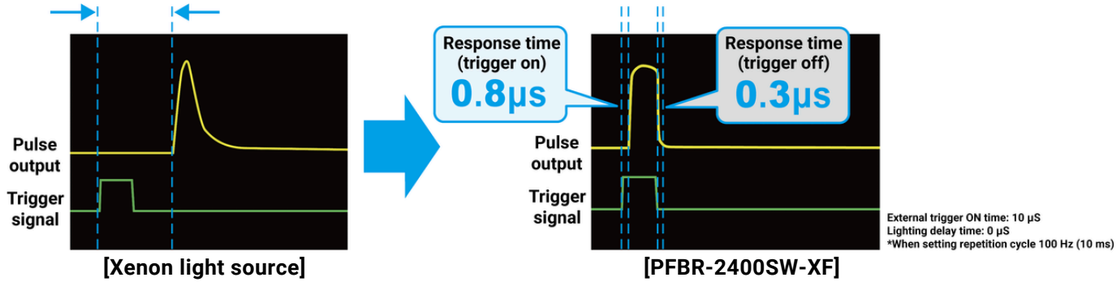

[Xenon light source] [PFBR-2400SW-XF]

Replacement for
Near Infrared Halogen Light Source



SLG-150V-CCS Series

- Lineup of 9 wavelengths
  850nm, 940nm, 1060nm, 1100nm,
  1150nm, 1200nm, 1300nm, 1450nm, 1550nm

Click Here

Light Guides

In addition to the standard lineup of ring and straight light guides, special light guides can also be customized to suit your application

Here are some examples of our custom products.
Please contact our sales representative for details.

Low angle ring light guide for high magnification lenses

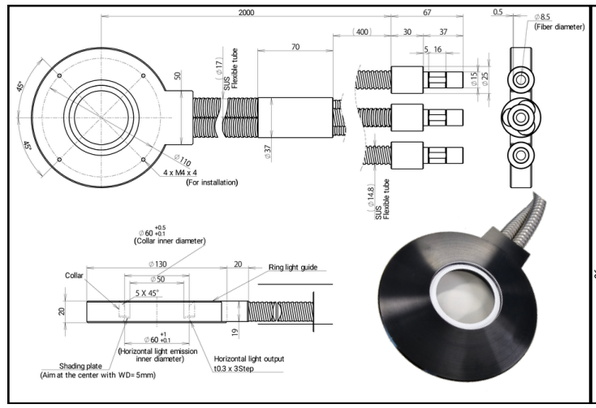

Low angle ring light guide

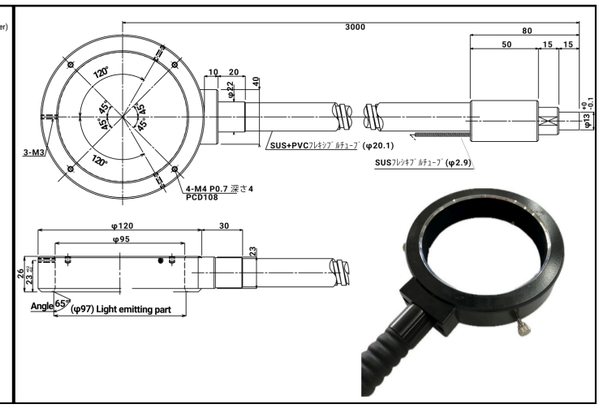

Cross line light guide

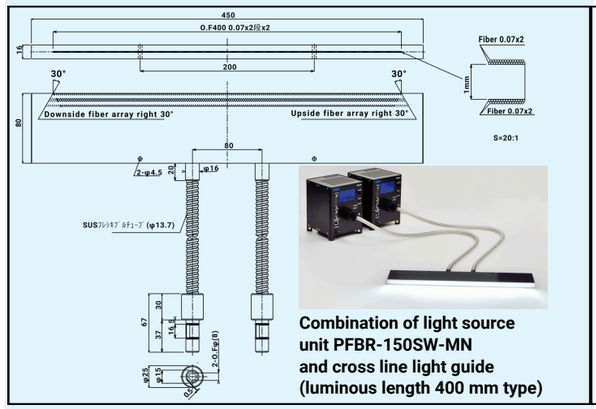

Combination of light source unit PFBR-150SW-MN and cross line light guide (luminous length 400 mm type)

C-type ring light guide

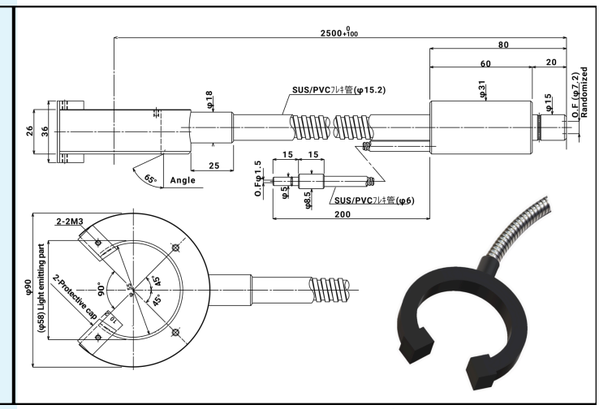

Dimensions (mm)

Cross line light guide achieves oblique light illumination suitable for detecting scratches

Select the oblique light direction to achieve ideal illumination for scratch detection.



Left-sided oblique light illumination



Double-sided oblique light illumination



Right-sided oblique light illumination

Copyright © 2024 CCS Inc. All Rights Reserved.
Content current as of July 2024 CHA-0028-2407 (NL)